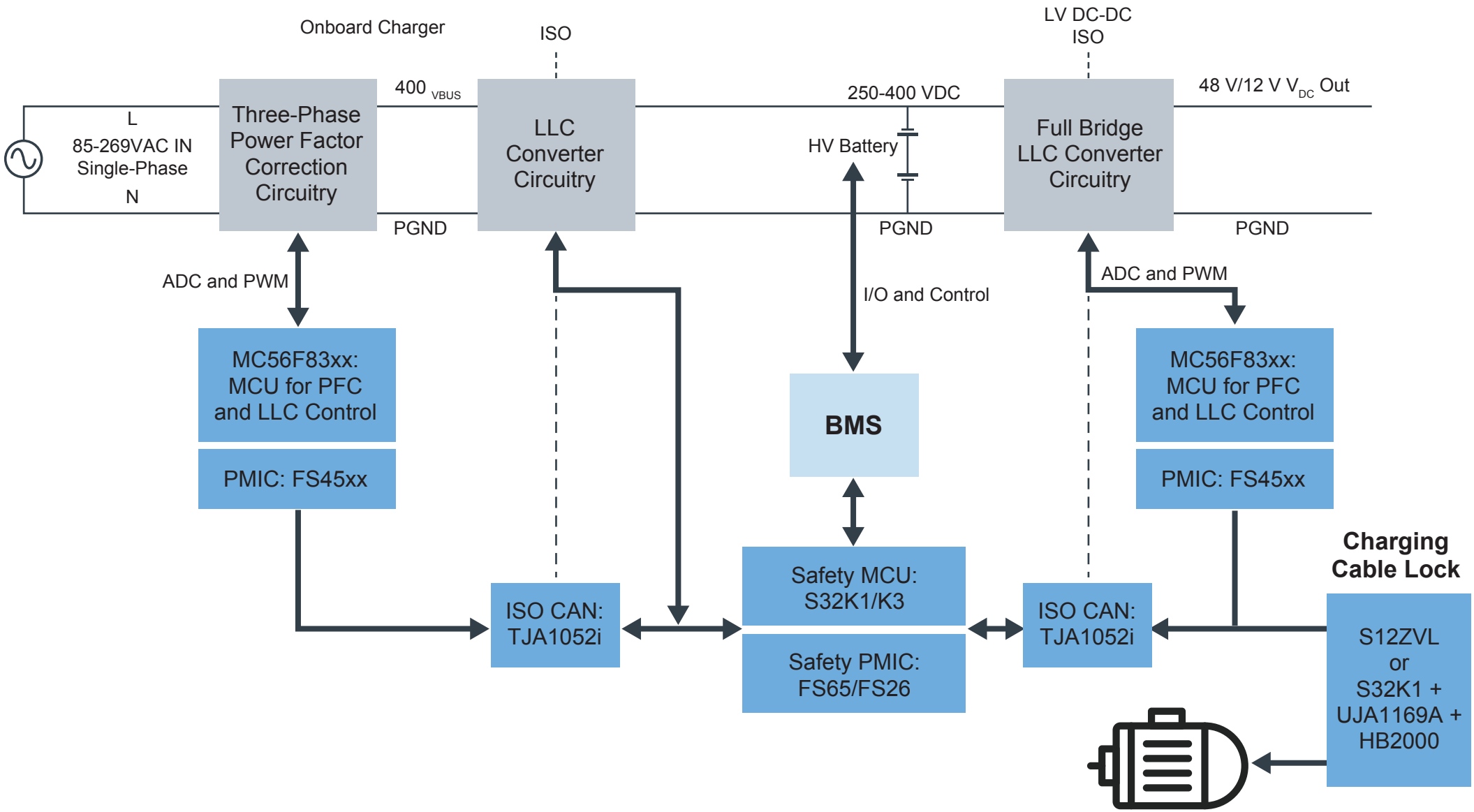OBC/DC-DC AND CABLE LOCK SOLUTION BLOCK DIAGRAM