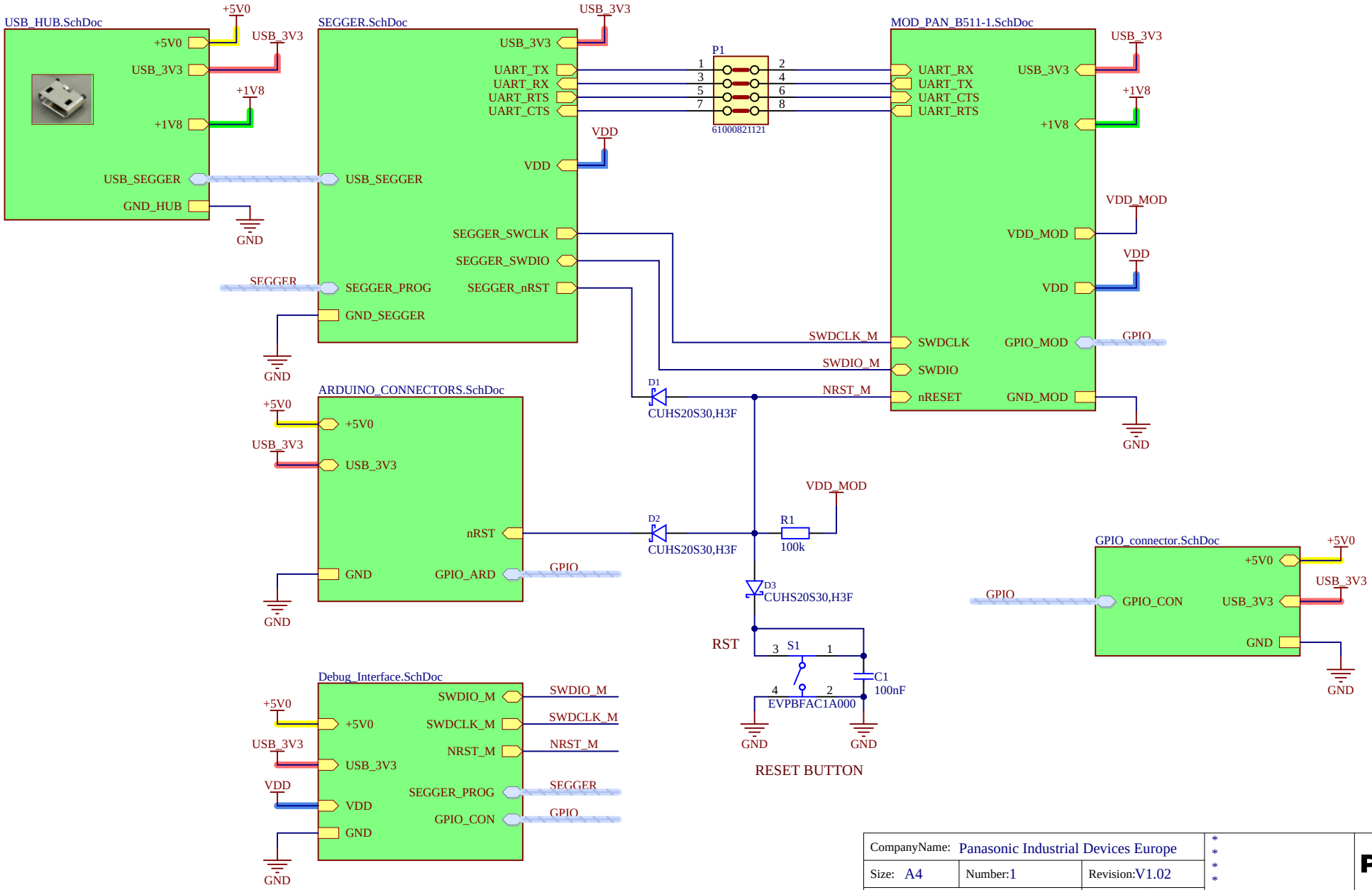

CompanyName: Panasonic Industrial Devices Europe			Panasonic
Size: A4	Number:1	Revision:V1.02	
Date: 16.12.2024	Time: 10:00:04	Sheet 1 of 7	
File: PAN_B511-1_EVB_ArduinoCompatible.SchDoc			

USB SEGGER Power Supply

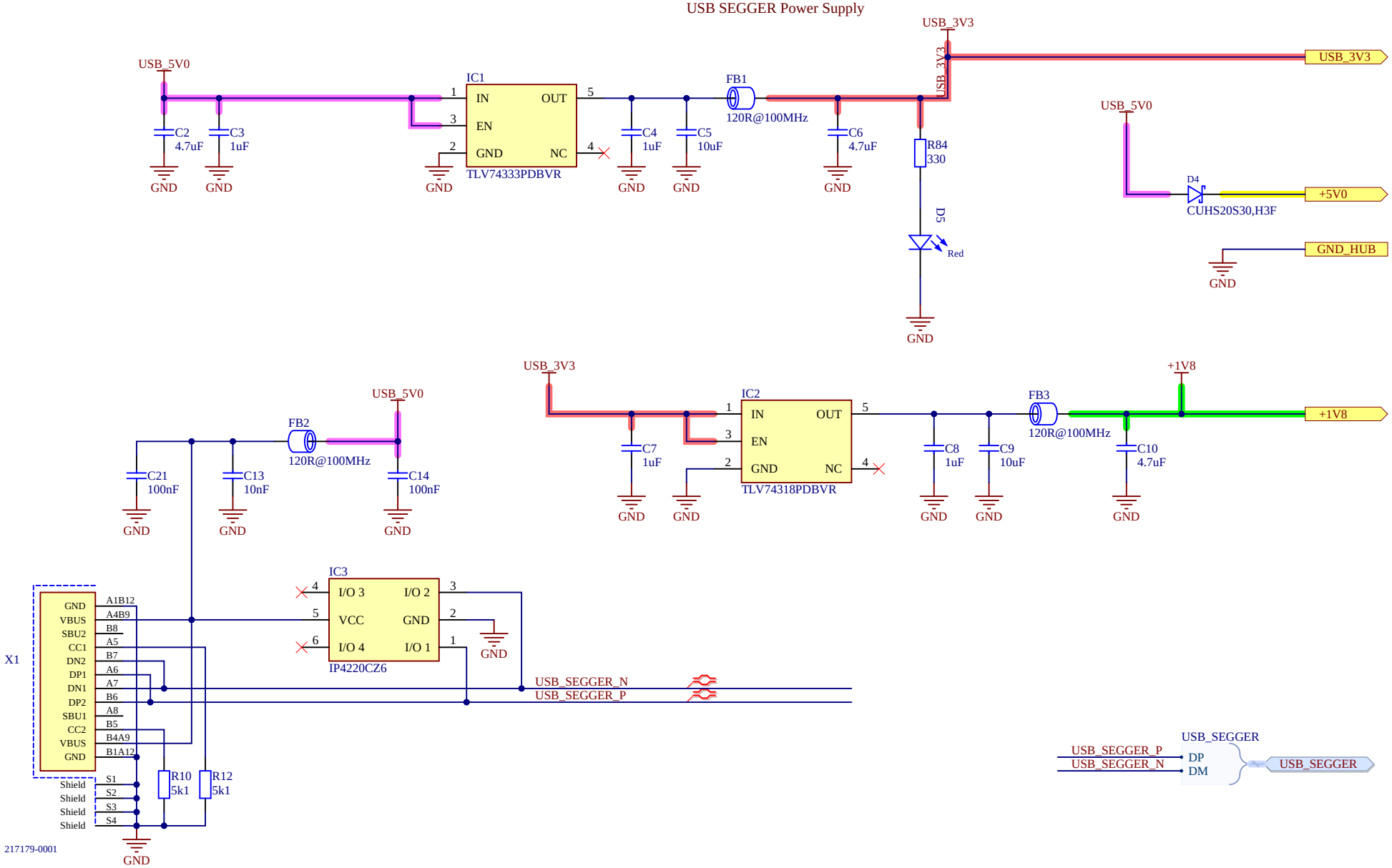

SEGGER USB Connector

CompanyName: Panasonic Industrial Devices Europe			Panasonic
Size: A4	Number:2	Revision:V1.02	
Date: 16.12.2024	Time: 10:00:04	Sheet 2 of 7	
File: USB_HUB.SchDoc			

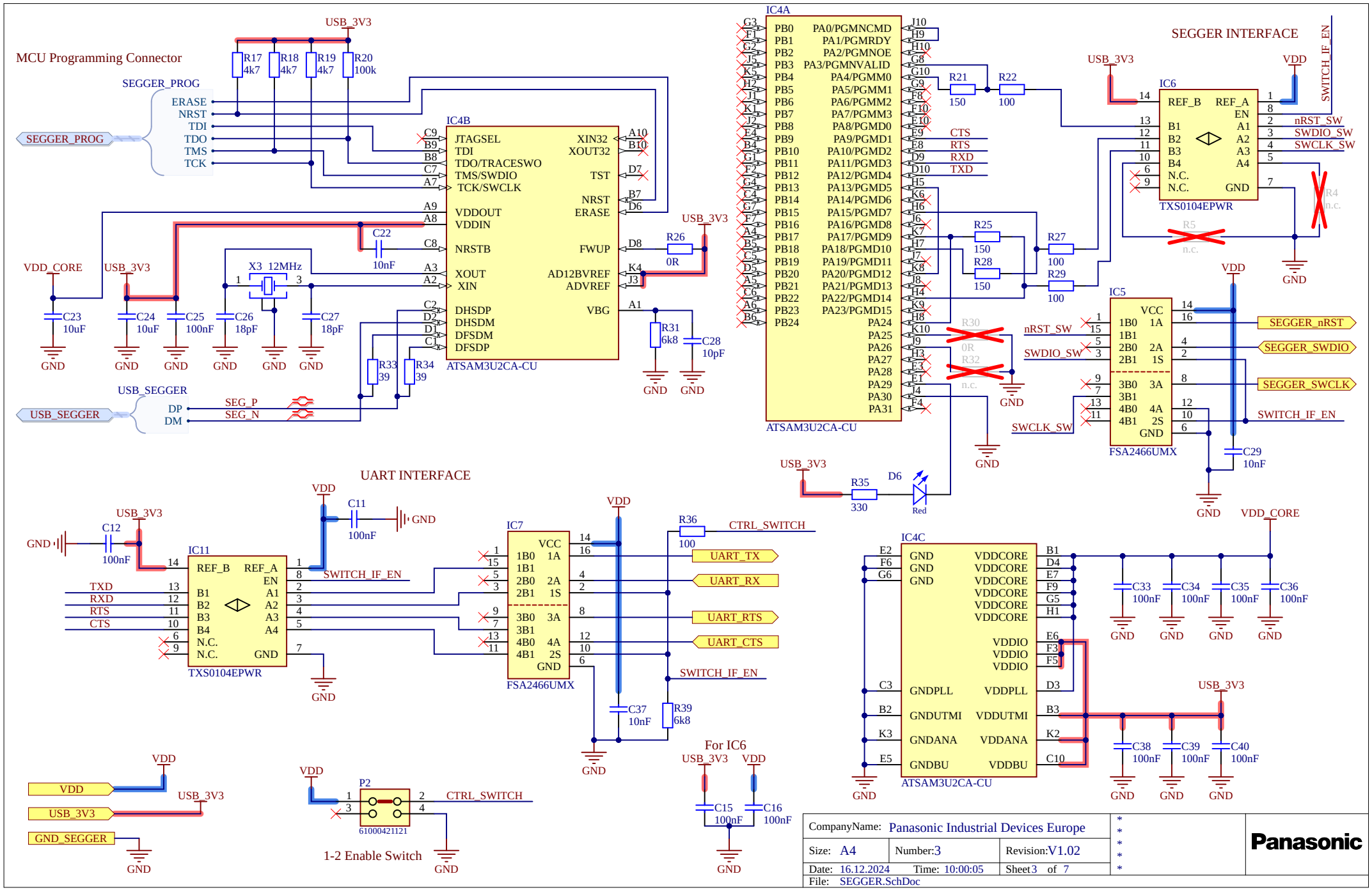
MCU Programming Connector
SEGGER_PROG
ERASE
NRST
TDI
TDO
TMS
TCK
USB_3V3
R17 4k7
R18 4k7
R19 4k7
R20 100k
IC4B
JTAGSEL
TDI
TDO/TRACESWO
TMS/SWDIO
TCK/SWCLK
VDDOUT
VDDIN
NRSTB
XOUT
XIN
DHSDP
DHSDM
DFSDM
DFSDP
XIN32
XOUT32
TST
NRST
ERASE
FWUP
AD12BVREF
ADVREF
VBG
ATSAM3U2CA-CU
C22 10nF
R26 0R
VDD_CORE
C23 10uF
C24 10uF
C25 100nF
C26 18pF
C27 18pF
X3 12MHz
GND
USB_SEGGER
DP
DM
SEG_P
SEG_N
R33 39
R34 39
R31 6k8
C28 10pF
IC4A
PB0 PA0/PGMNCMD
PB1 PA1/PGMRDY
PB2 PA2/PGMNOE
PB3 PA3/PGMNVALID
PB4 PA4/PGMM0
PB5 PA5/PGMM1
PB6 PA6/PGMM2
PB7 PA7/PGMM3
PB8 PA8/PGMD0
PB9 PA9/PGMD1
PB10 PA10/PGMD2
PB11 PA11/PGMD3
PB12 PA12/PGMD4
PB13 PA13/PGMD5
PB14 PA14/PGMD6
PB15 PA15/PGMD7
PB16 PA16/PGMD8
PB17 PA17/PGMD9
PB18 PA18/PGMD10
PB19 PA19/PGMD11
PB20 PA20/PGMD12
PB21 PA21/PGMD13
PB22 PA22/PGMD14
PB23 PA23/PGMD15
PB24 PA24
PA25
PA26
PA27
PA28
PA29
PA30
PA31
R21 150
R22 100
CTS
RTS
RXD
TXD
R25 150
R28 150
R27 100
R29 100
R30 0R
R32 n.c.
SEGGER INTERFACE
IC6
REF_B
REF_A
EN
B1
B2
B3
B4
N.C.
N.C.
A1
A2
A3
A4
GND
TXS0104EPWR
nRST_SW
SWDIO_SW
SWCLK_SW
SWITCH_IF_EN
R4 n.c.
R5 n.c.
IC5
VCC
1B0 1A
1B1
2B0 2A
2B1 1S
3B0 3A
3B1
4B0 4A
4B1 2S
FSA2466UMX
SEGGER_nRST
SEGGER_SWDIO
SEGGER_SWCLK
C29 10nF
R35 330
D6 Red
UART INTERFACE
IC11
C12 100nF
C11 100nF
TXD
RXD
RTS
CTS
IC7
R36 100
CTRL_SWITCH
UART_TX
UART_RX
UART_RTS
UART_CTS
C37 10nF
R39 6k8
IC4C
GND
VDDCORE
VDDIO
VDDPLL
VDDUTMI
VDDANA
VDDBU
GNDPLL
GNDUTMI
GNDANA
GNDBU
C33 100nF
C34 100nF
C35 100nF
C36 100nF
C38 100nF
C39 100nF
C40 100nF
VDD
USB_3V3
GND_SEGGER
P2
61000421121
1-2 Enable Switch
For IC6
C15 100nF
C16 100nF
CompanyName: Panasonic Industrial Devices Europe
Size: A4
Number:3
Revision:V1.02
Date: 16.12.2024
Time: 10:00:05
Sheet3 of 7
File: SEGGER.SchDoc
Panasonic

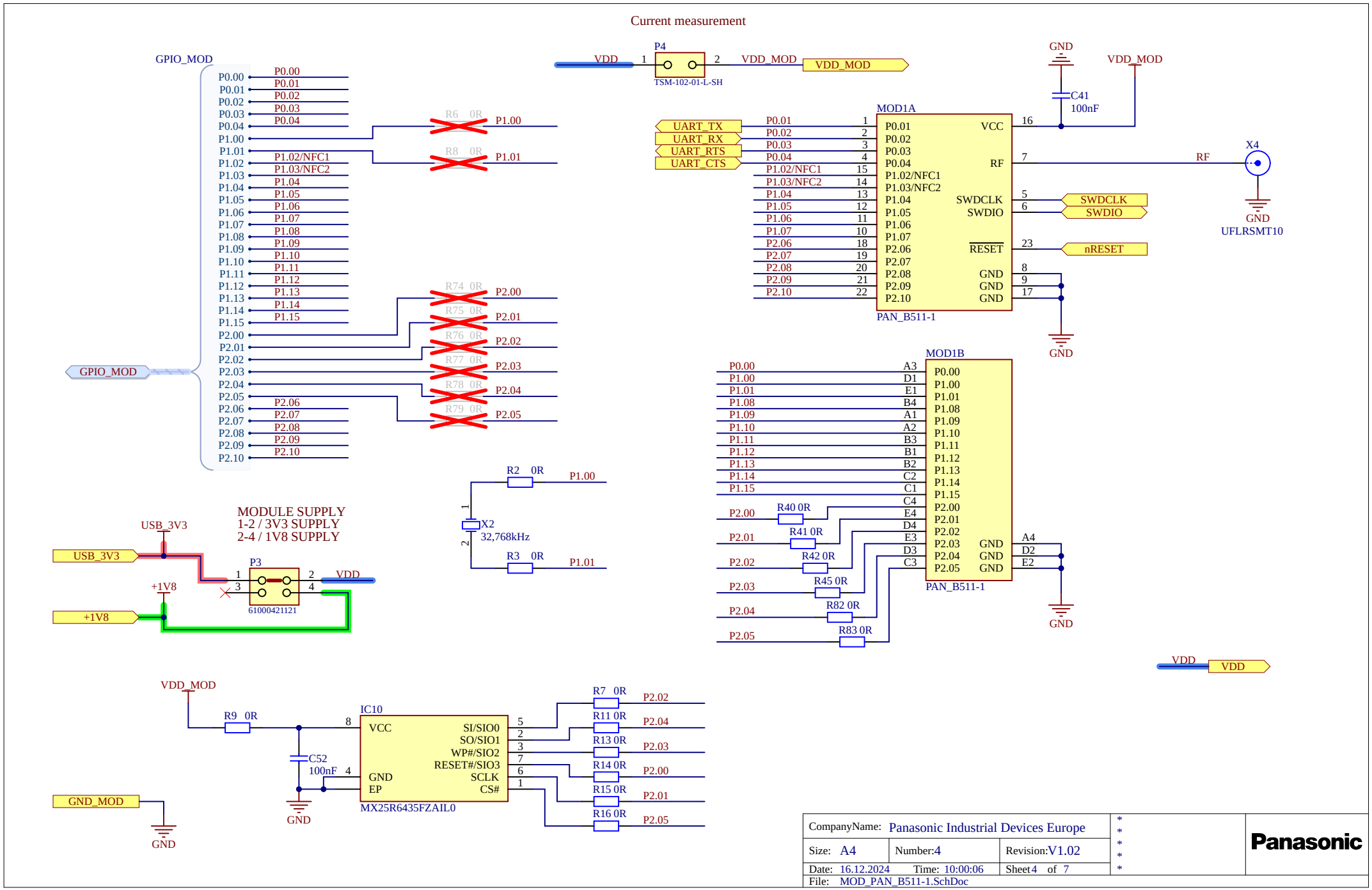
Current measurement
GPIO_MOD
P4
TSM-102-01-L-SH
VDD
VDD_MOD
GND
C41
100nF
MOD1A
PAN_B511-1
UART_TX
UART_RX
UART_RTS
UART_CTS
SWDCLK
SWDIO
nRESET
RF
X4
UFLRSMT10
R6 0R
R8 0R
R74 0R
R75 0R
R76 0R
R77 0R
R78 0R
R79 0R
MODULE SUPPLY
1-2 / 3V3 SUPPLY
2-4 / 1V8 SUPPLY
USB_3V3
+1V8
P3
61000421121
R2 0R
R3 0R
X2
32,768kHz
MOD1B
R40 0R
R41 0R
R42 0R
R45 0R
R82 0R
R83 0R
VDD_MOD
R9 0R
C52
100nF
IC10
MX25R6435FZAIL0
GND_MOD
R7 0R
R11 0R
R13 0R
R14 0R
R15 0R
R16 0R
CompanyName: Panasonic Industrial Devices Europe
Size: A4
Number:4
Revision:V1.02
Date: 16.12.2024
Time: 10:00:06
Sheet 4 of 7
File: MOD_PAN_B511-1.SchDoc
Panasonic

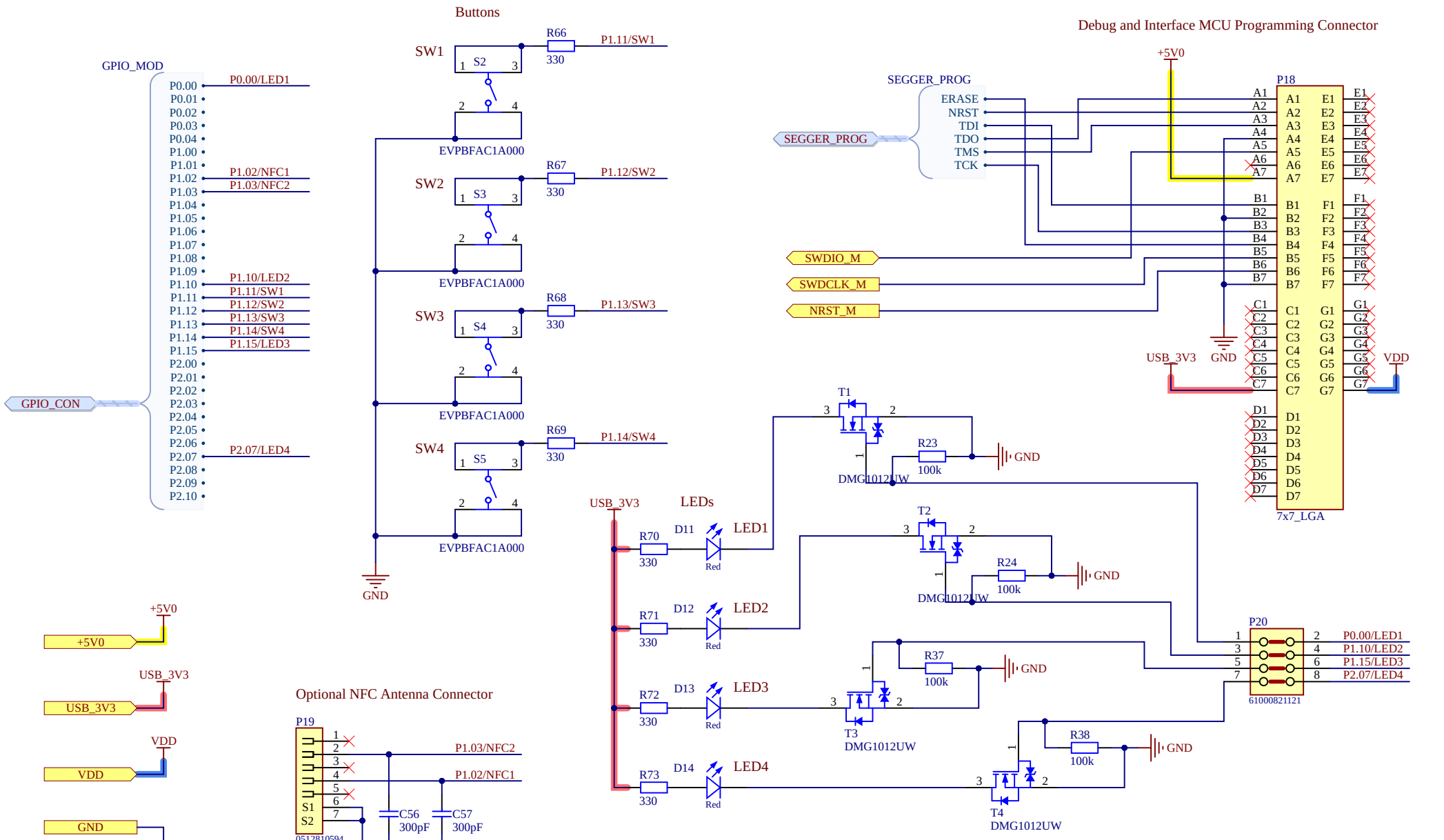

CompanyName: Panasonic Industrial Devices Europe			Panasonic
Size: A4	Number:5	Revision:V1.02	
Date: 16.12.2024	Time: 10:00:07	Sheet 5 of 7	
File: Debug_Interface.SchDoc			

Arduino Interface Connectors

NO 5V tolerant GPIO Input !

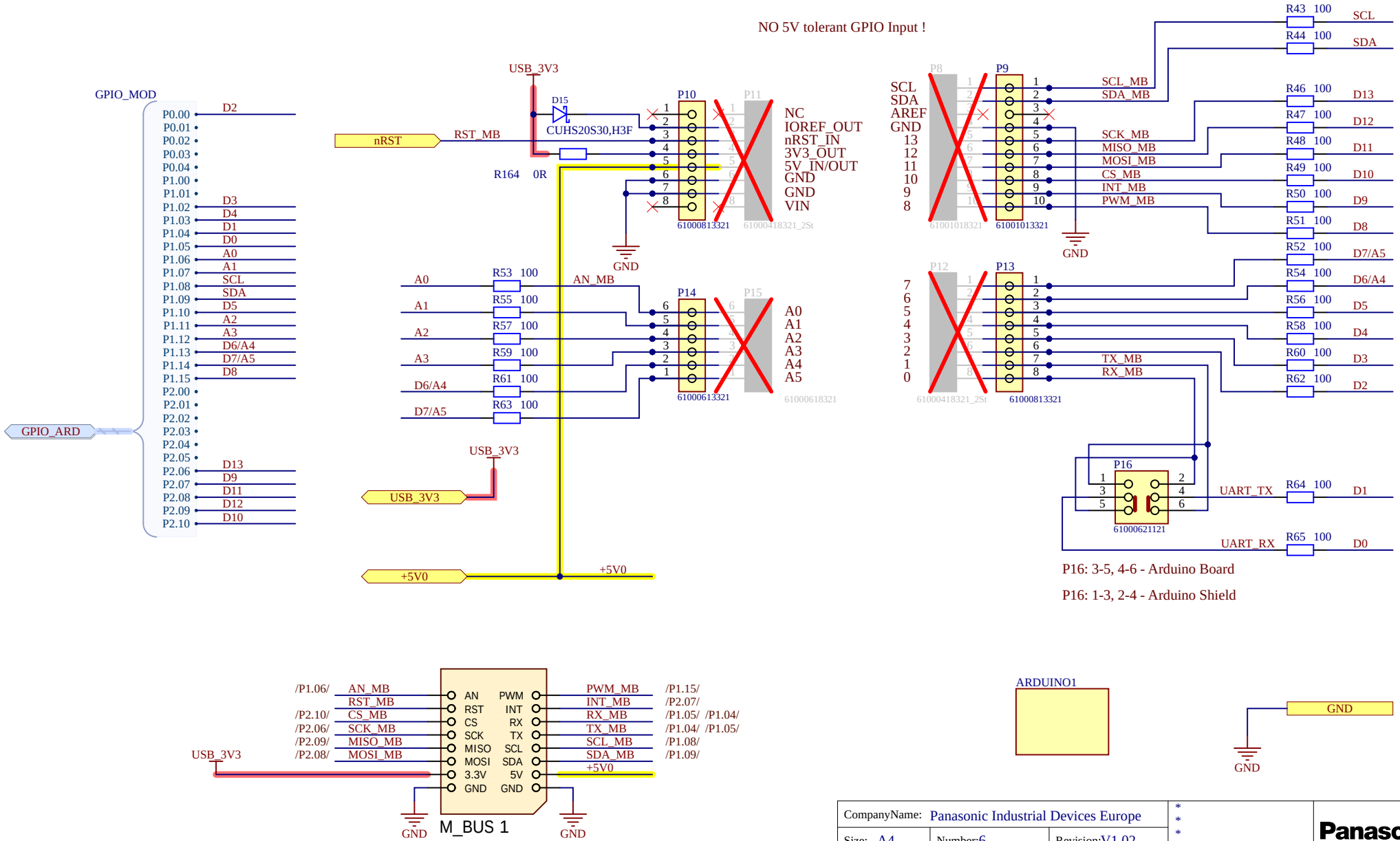

CompanyName: Panasonic Industrial Devices Europe		*	Panasonic
Size: A4	Number:6	Revision:V1.02	
Date: 16.12.2024	Time: 10:00:09	Sheet 6 of 7	
File: ARDUINO_CONNECTORS.SchDoc			

GPIO Interface connector

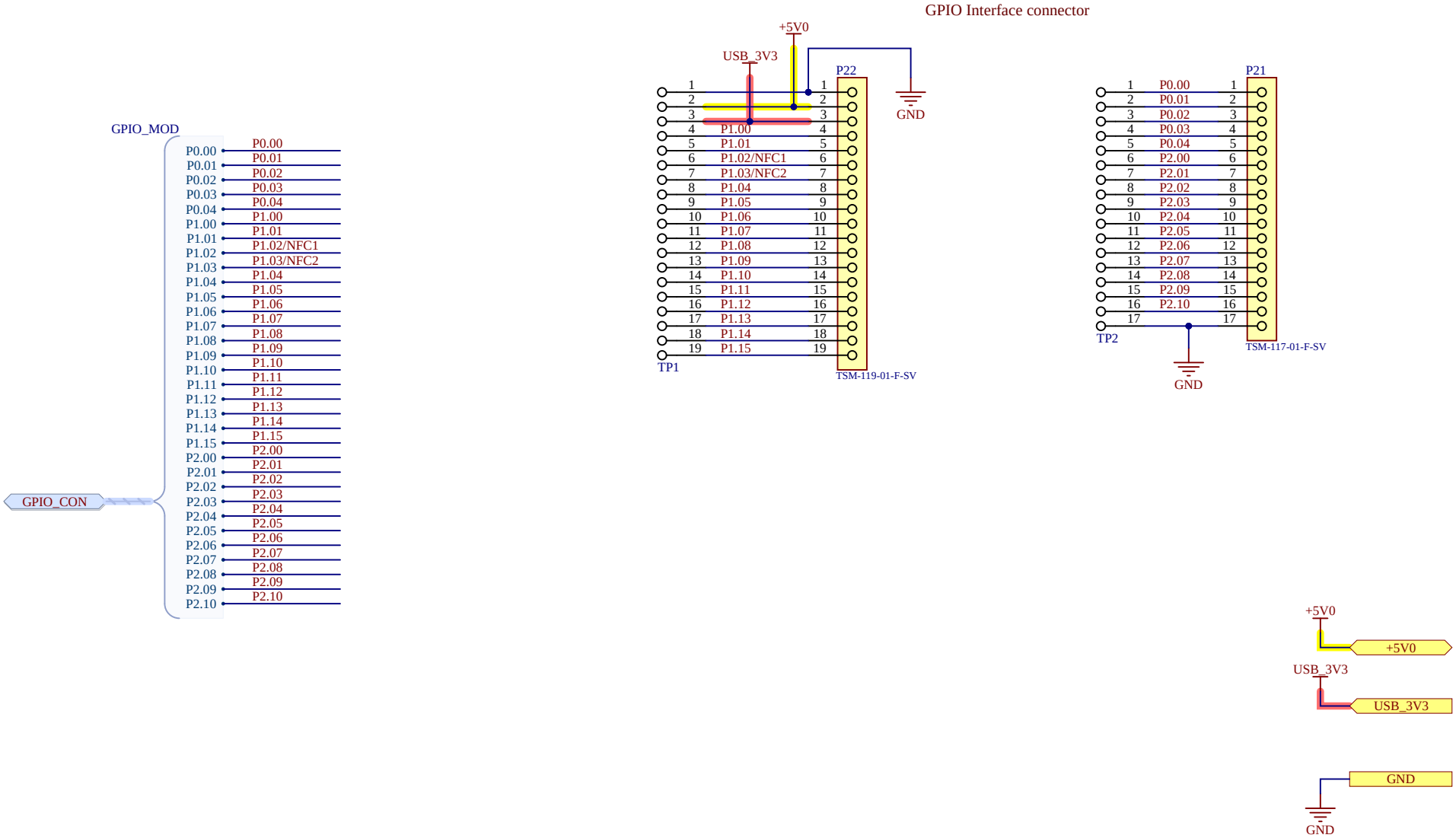

CompanyName: Panasonic Industrial Devices Europe			Panasonic
Size: A4	Number:7	Revision:V1.02	
Date: 16.12.2024	Time: 10:00:10	Sheet 7 of 7	
File: GPIO_connector.SchDoc			